MIKI PULLEY

METAL DISC COUPLING
SERVOFLEX
SFM－□N
Instruction Manual

☆This instruction manual describes mainly installation, removal, and notes pertaining to same for standard-specification products after purchase; see the Miki Pulley website and our latest catalog for product specifications and performance.

☆Before use this product, read the instruction manual carefully and use the product safely and correctly.

☆First, please check that it is the correct product and if the product was damaged during transportation.

CONTENTS

1. STRUCTURE AND PARTS
2. NOTES
3. MOUNTING
4. REMOVAL

1. STRUCTURE AND PARTS

This product can be fastened to a shaft by using "clamping", "wedge coupling".

Note

The product is designed especially for high speeds and is shipped assembled and balance corrected; do not subject to strong impact.

Balance correction is only with the coupling itself. Be sure to perform centering during assembly and field balance correction after assembly.

■Clamping

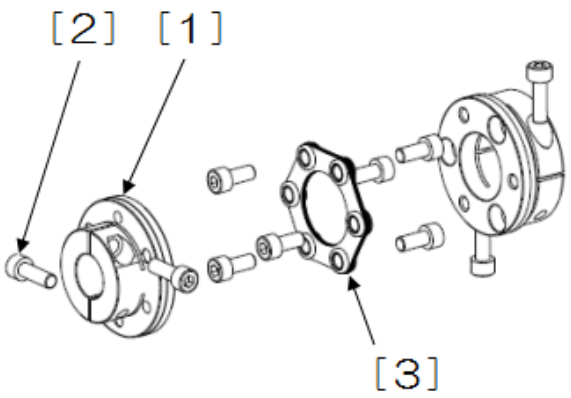

■Wedge coupling

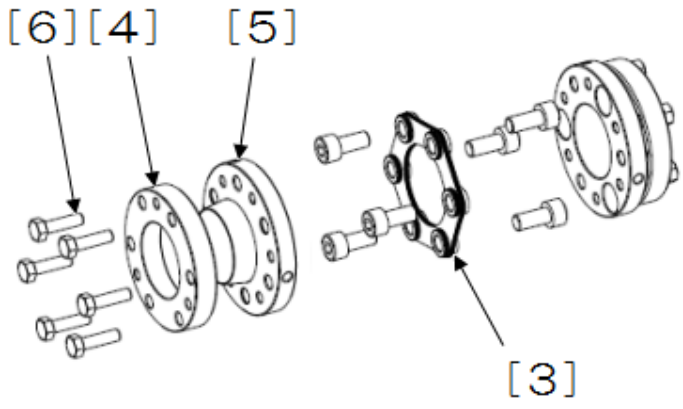

[1]Clamping hub [2]Clamping bolt [3]Element [4]Sleeve [5]Flange
[6]Pressure bolt(hexagon head bolt)

2. NOTES

2. 1 SAFETY PRECAUTIONS

Please read carefully through the instruction manual and the technical information for proper use and safety.
In this manual, safety precautions are classified by "DANGER" and "CAUTION".

【CLASS】

⚠ DANGER	When death or serious injury may result by mishandling.
⚠ CAUTION	When disability or only physical damage may result by mishandling.

【FIGURE SIGN】

PROHIBITION	In the handling of the product, it indicates that prohibit the act.
CAUTION	In the handling of the product, it indicates that attention is required.
MANDATORY	In the handling of the product, it indicates that the action is compulsory on the basis of the instructions.

⚠ DANGER

Make sure that the main power of the product is off before mounting or performing maintenance/inspection.	**Set up a safety mechanism such as a safety brake to avoid any danger.**
It is extremely dangerous if the driving part starts operating by accident while handling the product.	The driven and driving sides could become completely detached if the product is damaged while in operation and not immediately halted.
Be sure to use a safety cover.	
It is extremely dangerous if hands, fingers, hair, clothing, etc. get caught in the product or a rotating part while in operation.	

⚠ CAUTION

Always use clamping bolts and pressure bolts specified by Miki Pulley and a calibrated torque screwdriver and torque wrench correctly to install couplings at the specified tightening torque.	**Use a safety glasses or gloves.**
Depending on the tightening adjustment of bolts, exceptionally dangerous situations such as product damage or performance degradation could occur.	Sharp portions of element comprising the thin disc spring, product bore diameter, etc. may cause injury.
Be careful lifting a heavy weight. Do not lift with a bad posture.	
Straining yourself to lift a heavy product or using a torque wrench, or an awkward posture when installing the product in a machine could cause back injury.	

2. 2 IMPORTANT POINTS OF PRODUCT SPECIFICATIONS

	**The product is designed especially for high speeds and is shipped assembled and balance corrected; do not subject to strong impact.** May affect assembly precision and cause the parts to break during use.		**Balance correction is only with the coupling itself. Be sure to perform centering during assembly and field balance correction after assembly.** Misalignment and improper balancing can allow vibration to occur at high revolutions.
	**Do not use the product in a bad environment.** Operating temperature range： －30～+120℃ Do not use the product in an environment where water, oil, or chemicals may spill (no matter how little), that is corrosive, where temperature is extremely high or low, that is dusty, where condensation forms, that is exposed to wind and rain, or that is subject to a high degree of vibration/impact; may cause product damage or performance deterioration.		**Request disposal with a waste-collection company, or dispose of according to laws and regulations.** When disposing of the product, request disposal with professionals, or dispose of according to law and local regulations if disposing of product by yourself. Do not dispose of or leave unattended where children play or in a public space.
	**Comes as a finished product. Do not disassemble, modify, or additionally process the product.** We do not guarantee quality nor shall we be liable for damages in the event of damage or affected performance of the product or of injury or accident occurring as a result of the product being disassembled, modified, or additionally processed by the customer.		**Always be careful of allowable parallel, angular, and axial misalignment.(See table)** Poor precision can result in product damage.
	**Even for a same size, specifications with differing nominal rated torque are available.** **Number of bolts, nominal diameter, and tightening torque differ depending on the nominal rated torque. Be sure to check the specifications of your selected product before use.** Incorrect specification can result in product damage.		**Prepare detachment bolts for releasing the coupling when self-locked.** **Pressure bolts may be used.** **Check that sufficient work space is available for inserting the detachment bolts.** If pressure bolts are used as detachment bolts, their tips may deform when used for releasing the coupling and prevent their reuse for installation.

SIZE	TYPE	Misalignment		
		Parallel [mm]	Angular [°]	Axial [mm]
060	SS-60N	0.02	1	±0.3
	SS-80N			
070	SS-90N	0.02	1	±0.5
	SS-100N			
080	SS-150N	0.02	1	±0.5
	SS-200N			
090	SS-250N	0.02	1	±0.6
	SS-300N			
100	SS-450N	0.02	1	±0.65
120	SS-600N	0.02	1	±0.8
140	SS-800N	0.02	1	±1.0
	SS-1000N			

2. 3 IMPORTANT POINTS BEFORE MOUNTING

	**Never tighten the clamping bolts and pressure bolts before inserting a shaft to this product.** The inner surfaces will become deformed and the shaft uninsertable.		**Do not deform the element.** Be careful when inserting the coupling onto the shaft so as not to subject to strong shock or apply excessive force of compression or tensile force to the element.
	**Tighten diagonally opposite clamping bolts and pressure bolts evenly, a little at a time. Do not completely tighten only one bolt first.** Tightening the bolts in order will maintain the coupling of the shafts. Inadvertently tightening only one bolt completely first may cause lower holding power and bolt damage during use.		**The inserted lengths of shafts should be lengths as specified. Ensure that shafts do not interfere with each other or with other components.** A shaft not inserted to the specified length will result in lower transmission torque and affect accuracy. The inner circumference may also deform, and prevent shaft insertion to the specified length.
	**Do not wipe away grease from the bolts or tapered surfaces of the product.** The product is shipped with grease applied beforehand to ensure coupling. Wiping away grease affects coupling power.		**Wipe off any rust, dust, or oil on the shaft and inner diameter surface of the coupling. Wipe away any antirust grease, dirt, etc. with a cloth.** Soiling will degrade shaft holding power and prevent the product from performing to capacity. In particular, never allow oil or grease containing antifriction or other agent (molybdenum-, silicon-, or fluorine-based), which would dramatically affect the friction coefficient, to contact the surface.

3. MOUNTING

3. 1 CLAMPING

(1)

Wipe off any rust, dust, oil, etc. from the shaft and inner diameter surfaces of the coupling. In particular, never allow oil or grease containing antifriction or other agent (molybdenum-, silicon-, or fluorine-based), which would dramatically affect the friction coefficient, to contact the surface.

Note

Do not wipe away grease from the bolts.

(2)

Check that the clamping bolts have been loosened before inserting the coupling onto the motor shaft. Be careful when inserting the couplings into the shaft so as not to apply excessive force of compression or tensile force to the element.

Also check the stamped marks on the product for identifying countershaft tolerances (stamped on the surfaces of the clamping hub) before inserting to prevent misinsertion.

Mark	Countershaft tolerance
None	**h 7**
BK	**k 6**
BM	**m 6**
BJ	**j 6**
BS	Φ35 **0～+0.010**

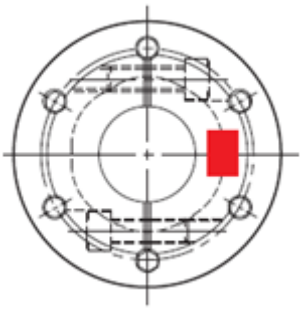

(3)

Insert and mount each shaft far enough in that the paired mounting shaft touches the coupling along the entire length of the clamping hub (LF dimension), as shown in the diagram below, and does not interfere with the elements.

Then temporarily tighten the two clamping bolts, tightening them alternately until the coupling cannot be manually rotated (does not slip and rotates together with the shaft).

SIZE (Clamping)	LF [mm]
060	**24**
070	**25**
080	**30**
090	**30**
100	**40**
120	**40**

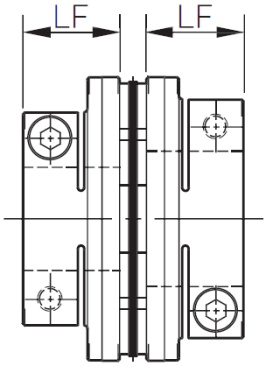

(4)

Hold a dial gauge against the outer diameter of the clamping hub (surface processed simultaneously with the inner diameter in the figure).

Note

Where indicated “NG” in the figure is not the runout measurement surface.

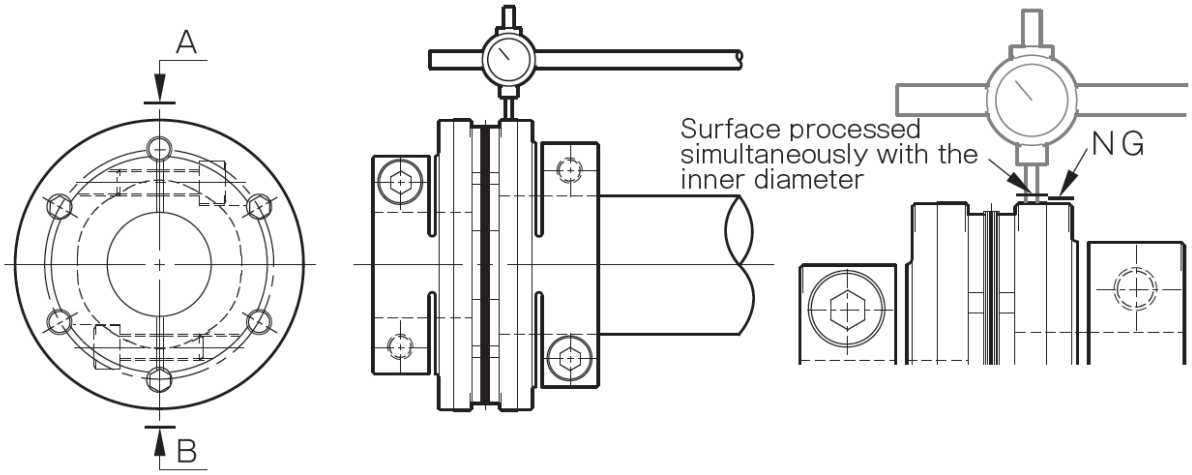

(5)

Gently rotate the motor shaft manually, and tighten and adjust the two clamping bolts alternately so the difference in the runout values at A and B in the figure below is 0.02 mm or less (and as close to 0 as possible).

Then use a calibrated torque wrench to tighten all the clamping bolts to a tightening torque listed below.

Note

Since it is fastened by two clamping bolts, tightening one bolt before the other will place more than the prescribed axial force on the bolt tightened first when the other bolt is tightened. Be sure to tighten them alternately, a little at a time.

Note

Even if the coupling size is the same, the nominal diameter for clamping bolts differs depending on the bore diameter and rated torque.

Be sure to proceed with work after also checking the tightening torque at the same time.

Clamping bolt Nominal size	Tightening torque [N·m]
M5	**7**
M6	**14**
M8	**34**
M10	**68**

(6)

Continue with mounting on the driven shaft side using the same procedure.

Insert the coupling, already mounted on the motor, to the driven shaft. When inserting, carry out steps (2) to (3) using the centering location, etc., proceeding until the clamping bolts are temporarily tightened.

(7)

Next, check the dimension between clamping hub faces (S dimension). Check at least at 2 locations at 180°, adjusting to keep this value as close to zero as possible.

Note

For size 080, the S dimension differs depending on the model number.

SIZE (Clamping)	S [mm]
060	5.4
070	5.9
080-150N	8.3
080-200N	7.7
090	8.3
100	10.2
120	10.2

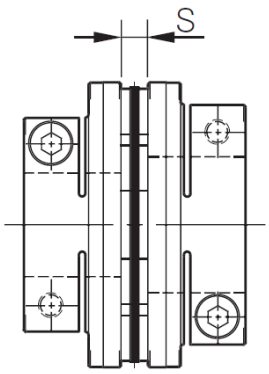

(8)

Continue further by checking runout in the same way as steps (4) to (5), and tighten the clamping bolts.

(9)

Before operation, be sure to perform field balance correction.

If anything is deemed to be abnormal, do not try to operate with the clutch or brake, and first resolve the issue before operating.

(10)

The clamping bolts may loosen after the initial period of use.

If loosening has occurred, carry out steps (4) to (9), and then retighten to the appropriate tightening torque.

3. 2 WEDGE COUPLING

(1)

Wipe off any rust, dust, oil, etc. from the shaft and inner diameter surfaces of the coupling. In particular, never allow oil or grease containing antifriction or other agent (molybdenum-, silicon-, or fluorine-based), which would dramatically affect the friction coefficient, to contact the surface.

Note

Do not wipe away grease from the bolts or tapered surfaces of the product (areas not in contact with shaft).

(2)

Check that the pressure bolts have been loosened before inserting the coupling onto the motor shaft. Be careful when inserting the coupling onto the shaft so as not to apply excessive pressing or pulling force to the element.

Also check the tool marks on the product for identifying countershaft tolerances (stamped on the circumference of the flange) before inserting to prevent misinsertion.

Mark	Countershaft tolerance
None	h 7
KK	k 6
KM	m 6
KJ	j 6
KS	Φ35 0～+0.010

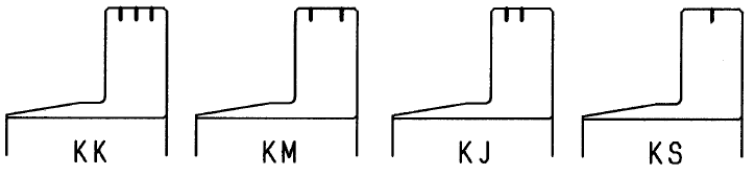

(3)

Insert and mount each shaft far enough in that the paired mounting shaft touches the coupling along the entire length of the clamping hub (LF dimension), as shown in the diagram below, and does not interfere with the elements, spacers or the other shaft.

SIZE (Wedge coupling)	LF [mm]
070	23.5
080	25.5
090	25.5
100	27.5
120	27.5
140	36.5

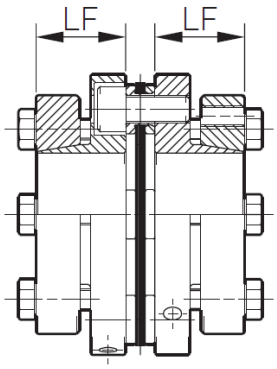

(4)

Continue by using the drive pin holes on the outer circumference (dimension H in the catalog: 5.1, 6.8, 8.6 mm depending on size, several locations) to tighten diagonally opposite pressure bolts on the motor shaft side evenly, a little at a time.

As runout will be adjusted next, so only tighten loosely at this step.

(5)

Touch the dial gauge to the flange end face or outer diameter on the motor shaft side. Then, while gently rotating the motor shaft manually, adjust the flange periphery and end face by hammering until the runout is as close to zero as possible.

Note

Touch at locations on the outer diameter other than the drive pin holes.

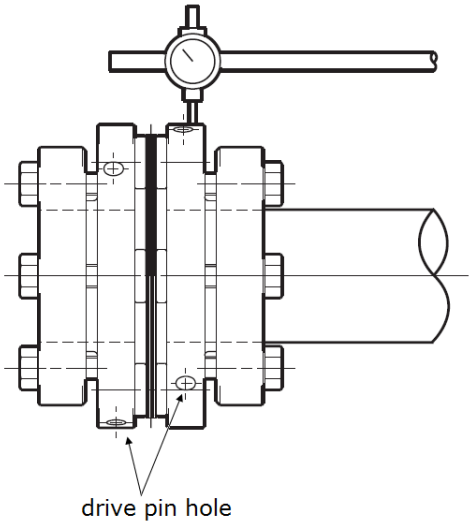

(6)

Sequentially fasten the pressure bolts while doing hammering adjustments, and then use a calibrated torque wrench to tighten all the pressure bolts to the given tightening torques.

Check again that the runout value is low.

Pressure bolt Nominal size	Tightening torque [N·m]
M6	10
M8	24

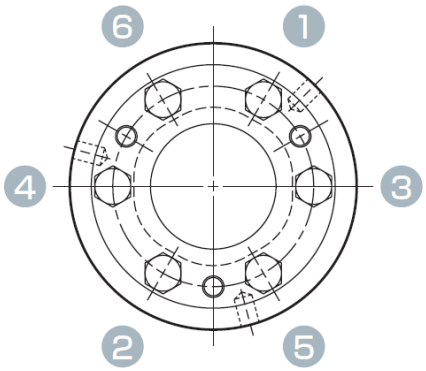

(7)

Continue with mounting on the driven shaft side using the same procedure.

Insert the coupling, already mounted on the motor, to the driven shaft. When inserting, carry out steps (2) to (4) using the centering location, etc., proceeding until the pressure bolts are temporarily tightened.

(8)

Next, check the dimension between flange faces (S dimension). Check at least at 2 locations at 180°, adjusting to keep this value as close to zero as possible.

Note

For size 080, the S dimension differs depending on the model number.

SIZE (Wedge coupling)	S [mm]
070	5.9
080-150N	8.3
080-200N	7.7
090	8.3
100	10.2
120	10.2
140	10.6

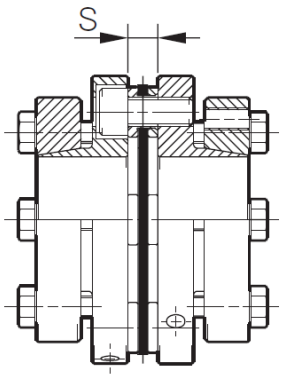

(9)

Continue further by checking runout in the same way as steps (5) to (6), and tighten the pressure bolts.

(10)

Before operation, be sure to perform field balance correction.

If anything is deemed to be abnormal, do not try to operate with the clutch or brake, and first resolve the issue before operating.

(11)

The pressure bolts may loosen after the initial period of use.

If loosening has occurred, carry out steps (5) to (10), and then retighten to the appropriate tightening torque.

3. 3 Important when Combining for High-Revolution (Main Shaft) Applications

For high-revolution applications such as a machining center main shaft, vibration can become an issue.
One cause of vibration at high revolutions is misalignment of shaft axes when combining the spindle motor and the main shaft, with vibration still occurring even with balance correction of the coupling itself.
While it is possible to allow for some misalignment occurring as parallel, angular, or axial displacement, it is particularly important to take care with misalignment with high-revolution applications. Be sure to perform axial adjustment during assembly and field balance correction after assembly.

4. REMOVAL

Before starting work, ensure safety by turning off the main equipment power and making sure no torque or thrust are applied to the coupling and there is no risk of the shaft and coupling falling by their own weight.

4. 1 CLAMPING

(1)
The coupling is instantaneously released by loosening the clamping bolts.

Note
Be sure not to loosen anything other than the clamping bolts. Product is shipped assembled, and cannot be restored if disassembled.
Note that grease has been applied to the clamping bolts, so do not remove them all the way.

Note
Since it is fastened by two clamping bolts, tightening one bolt before the other will place more than the prescribed axial force on the bolt tightened first when the other bolt is tightened.

4. 2 WEDGE COUPLING

(1)
Loosen all the pressure bolts placing pressure on the sleeve until the gap between seat and sleeve is about 2 mm.

Note
The sleeve is self-locking; the coupling cannot be released simply by loosening the pressure bolts.
Note that in some cases, a coupling can be released by loosening the pressure bolts.

(2)
Insert the detachment bolts into the detachment screw holes in the sleeve edge.
Continue by tightening them alternately a little at a time. The coupling will be released.
For this method, a space 28 mm (SIZE 140 : 41.5 mm) must be available for inserting the detachment bolts.

Note
Pressure bolts are recommended as detachment bolts since their tips will deform when used for releasing the coupling and prevent their reuse for installation.

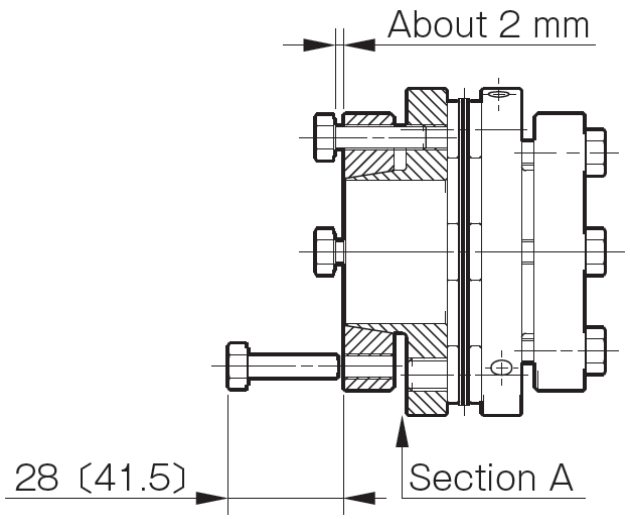

(3)

If there is no space in the axial direction, insert the tip of a flathead screwdriver or the like into part A and lightly tap perpendicular to the shaft or use it as a lever to pry off the coupling.

Use appropriate caution to not damage the coupling body or the pressure bolts.

MIKI PULLEY
http://www.mikipulley.co.jp/

Contact by email

Please contact us using the inquiry form and be aware that support for inquiries received on Saturdays, Sundays, holidays, New Year's, and summer business holidays will be provided on the next business day.

Contact by phone

Japanese/English
Miki Pulley International Business Department
TEL +81-46-257-5109