MIKI PULLEY

HIGH-RIGIDITY COUPLING
SERVORIGID
SRG
Instruction Manual

☆This instruction manual describes mainly installation, removal, and notes pertaining to same for standard-specification products after purchase; see the Miki Pulley website and our latest catalog for product specifications and performance.

☆Before use this product, read the instruction manual carefully and use the product safely and correctly.

☆First, please check that it is the correct product and if the product was damaged during transportation.

CONTENTS

1. STRUCTURE AND PARTS
2. NOTES
3. MOUNTING
4. REMOVAL

1. STRUCTURE AND PARTS

Note

Unlike flexible couplings, they have no element to absorb differences between the centers of two shafts.

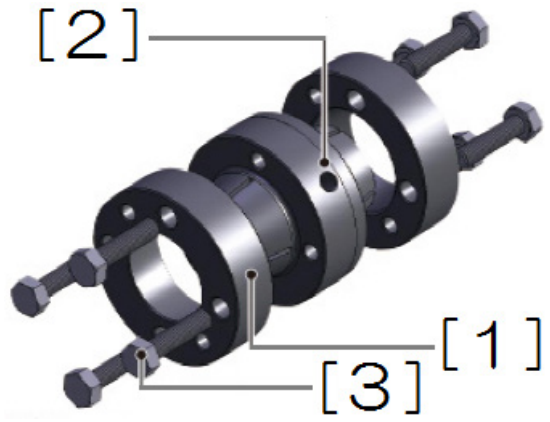

[1]Sleeve [2]Hub [3]Pressure bolt(hexagon head bolt)

2. NOTES

2. 1 SAFETY PRECAUTIONS

Please read carefully through the instruction manual and the technical information for proper use and safety.
In this manual, safety precautions are classified by "DANGER" and "CAUTION".

【CLASS】

⚠ DANGER	When death or serious injury may result by mishandling.
⚠ CAUTION	When disability or only physical damage may result by mishandling.

【FIGURE SIGN】

PROHIBITION	In the handling of the product, it indicates that prohibit the act.
CAUTION	In the handling of the product, it indicates that attention is required.
MANDATORY	In the handling of the product, it indicates that the action is compulsory on the basis of the instructions.

⚠ DANGER

Make sure that the main power of the product is off before mounting or performing maintenance/inspection.	**Set up a safety mechanism such as a safety brake to avoid any danger.**
It is extremely dangerous if the driving part starts operating by accident while handling the product.	The driven and driving sides could become completely detached if the product is damaged while in operation and not immediately halted.
Be sure to use a safety cover.	
It is extremely dangerous if hands, fingers, hair, clothing, etc. get caught in the product or a rotating part while in operation.	

⚠ CAUTION

Always use pressure bolts specified by Miki Pulley and a calibrated torque wrench correctly to install couplings at the specified tightening torque.	**Use a safety glasses or gloves.**
Depending on the tightening adjustment of pressure bolts, exceptionally dangerous situations such as product damage or performance degradation could occur.	Sharp portions of product bore diameter, etc. may cause injury.
Be careful lifting a heavy weight. Do not lift with a bad posture.	
Straining yourself to lift a heavy product or using a torque wrench, or an awkward posture when installing the product in a machine could cause back injury.	

2. 2 IMPORTANT POINTS OF PRODUCT SPECIFICATIONS

	**Do not use the product in a bad environment.** Operating temperature range： －30～+120℃ Do not use the product in an environment where water, oil, or chemicals may spill (no matter how little), that is corrosive, where temperature is extremely high or low, that is dusty, where condensation forms, that is exposed to wind and rain, or that is subject to a high degree of vibration/impact; may cause product damage or performance deterioration.		**Request disposal with a waste-collection company, or dispose of according to laws and regulations.** When disposing of the product, request disposal with professionals, or dispose of according to law and local regulations if disposing of product by yourself. Do not dispose of or leave unattended where children play or in a public space.
	**Comes as a finished product. Do not disassemble, modify, or additionally process the product.** We do not guarantee quality nor shall we be liable for damages in the event of damage or affected performance of the product or of injury or accident occurring as a result of the product being disassembled, modified, or additionally processed by the customer.		**When mounting, the centering precision of the two shafts must be as close to zero as possible.** Unlike flexible couplings, the product has no element to absorb differences between the centers of two shafts. Poor precision can result in product damage and breakage of the shafts themselves.
	**Prepare detachment bolts for releasing the coupling when self-locked. Bolts should be hexagon head bolts of the same dimensions as the pressure bolts.** **Check that sufficient work space is available for inserting the detachment bolts.** Pressure bolts are not recommended as detachment bolts since their tips will deform when used for releasing the coupling and prevent their reuse for installation.		

2. 3 IMPORTANT POINTS BEFORE MOUNTING

	Never tighten the pressure bolts before inserting a shaft to this product.		**The inserted lengths of shafts should be lengths as specified. Ensure that shafts do not interfere with each other or with other components.**
	The inner surfaces will become deformed and the shaft uninsertable. The product is shipped with the pressure bolts pretightened.		A shaft not inserted to the specified length will result in lower transmission torque and affect accuracy. The inner circumference may also deform, and prevent shaft insertion to the specified length.
	Tighten diagonally opposite pressure bolts evenly, a little at a time. Do not completely tighten only one bolt first.		**Wipe off any rust, dust, or oil on the shaft and inner diameter surface of the hub. Wipe away any antirust grease, dirt, etc. with a cloth.**
	Tightening the bolts in order will maintain the coupling of the shafts. Inadvertently tightening only one bolt completely first may cause lower holding power and bolt damage during use.		
	Do not wipe away grease from the pressure bolts or tapered surfaces of the product.		Soiling will degrade shaft holding power and prevent the product from performing to capacity. In particular, never allow oil or grease containing antifriction or other agent (molybdenum-, silicon-, or fluorine-based), which would dramatically affect the friction coefficient, to contact the surface.
	The product is shipped with grease applied beforehand to ensure coupling. Wiping away grease affects coupling power.		

3. MOUNTING

(1)

Wipe off any rust, dust, oil, etc. from the shaft and inner diameter surfaces of the coupling. In particular, never allow oil or grease containing antifriction or other agent (molybdenum-, silicon-, or fluorine-based), which would dramatically affect the friction coefficient, to contact the surface.

Note

Do not wipe away grease from the pressure bolts or tapered surfaces of the product (areas not in contact with shaft).

(2)

Check that the pressure bolts have been loosened before inserting the coupling onto the motor shaft.
Also check the stamped marks on the product for identifying countershaft tolerances (stamped on the outer circumference of the hub) before inserting to prevent misinsertion.

【STAMPED MARKS】

Mark	Countershaft tolerance
None	**h 7**
K	**k 6**
M	**m 6**
J	**j 6**
S	Φ35 **0～+0.010**

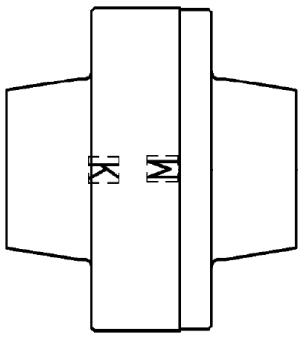

(3)

The inserted length of the motor shaft should be a length listed in the table below measured from the sleeve edge. However, be sure not to insert too far so that shafts come in contact with each other.

Be particularly careful not to apply excessive compressing force when inserting the paired shaft into the coupling after attaching the coupling to the motor shaft.

【INSERTED LENGTH OF SHAFT】

SIZE	LF [mm]
050	20 or more
060	24 or more
070	24 or more
080	25.5 or more

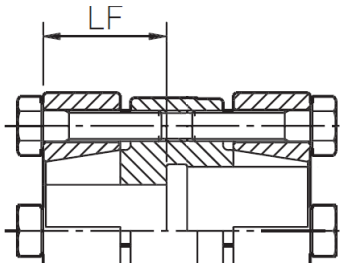

(4)

After the shafts are inserted and positioned, hold a dial gauge against the outer diameter of the hub (runout measurement surface in the figure).

Note

Where indicated “NG” in the figure is not the runout measurement surface.

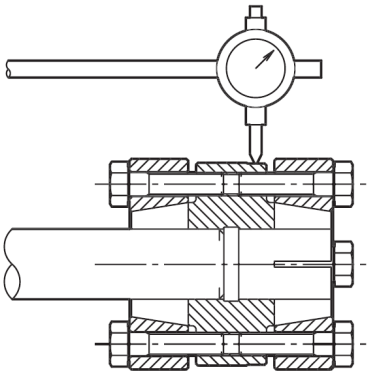

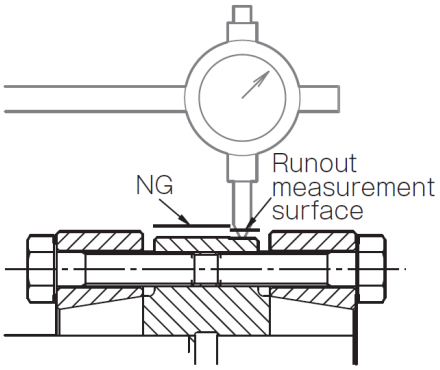

(5)

Gently rotate the motor shaft manually and tighten the pressure bolt by adjusting it to make sure the value of dial gauge is zero.

Tighten the pressure bolts evenly, a little at a time, on the diagonal, guided by the tightening procedure of the figure below. However, there is sometimes no need to follow the procedure, depending on the value of dial gauge.

■SRG-050･060

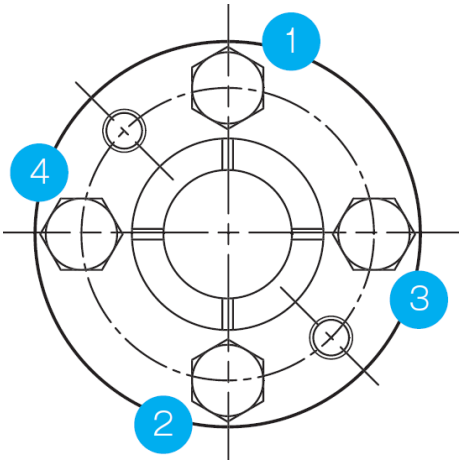

■SRG-070･080

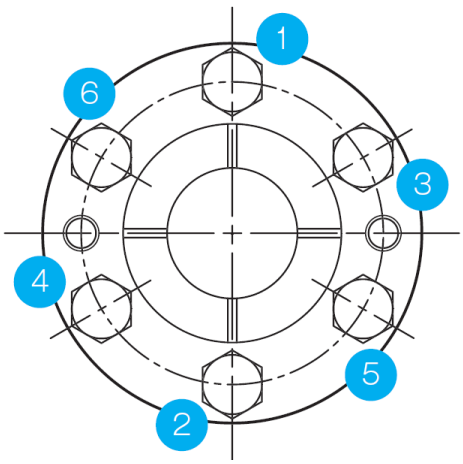

(6)

Finally, use a calibrated torque wrench to tighten all the pressure bolts to the appropriate tightening torques of the table below, make sure that there is no bolts loosened and that the runout is small (the value almost near to zero), and tighten the driven shaft using the same procedure.

【PRESSURE BOLT SPECIFICATIONS AND TIGHTENING TORQUES】

SIZE	Pressure bolt	Tightening torque [N·m]
050	M6×20	14
060	M6×24	14
070	M6×24	14
080	M6×25	14

4. REMOVAL

(1)

Before starting work, ensure safety by turning off the main equipment power and making sure no torque or thrust are applied to the coupling and there is no risk of the shaft and coupling falling by their own weight.

(2)

Loosen all the pressure bolts placing pressure on the sleeve until the gap between seat and sleeve is about 2 mm.

Note

The sleeve is self-locking; the coupling cannot be released simply by loosening the pressure bolts.
Note that in some cases, a coupling can be released by loosening the pressure bolts.

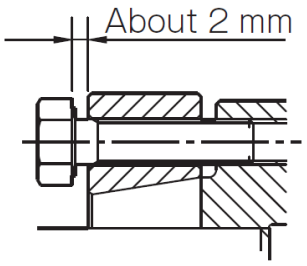

(3)

Insert the detachment bolts into the detachment screw holes in the sleeve edge.
Continue by tightening them alternately a little at a time. The coupling will be released.
For this method, a space (dimension N) must be available for inserting the detachment bolts.

Note

Prepare detachment bolts for releasing the coupling when self-locked. Bolts should be hexagon head bolts of the same dimensions as the pressure bolts.

Note

Pressure bolts are not recommended as detachment bolts since their tips will deform when used for releasing the coupling and prevent their reuse for installation.

【DETACHMENT BOLT SPECIFICATIONS AND RECOMMENDED N DIMENSION】

SIZE	Detachment bolt	N [mm]
050	M6×20	26
060	M6×24	30
070	M6×24	30
080	M6×25	31.5

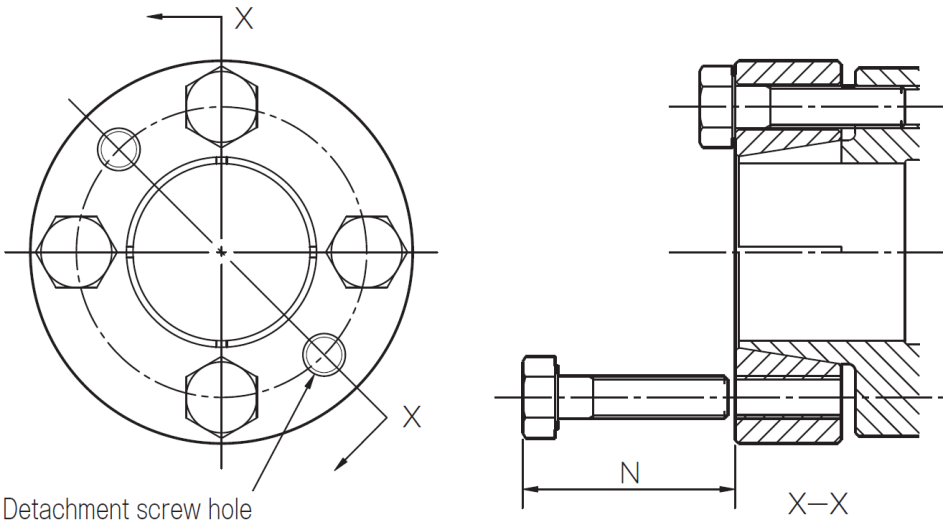

MIKI PULLEY
http://www.mikipulley.co.jp/

Contact by email
Please contact us using the inquiry form and be aware that support for inquiries received on Saturdays, Sundays, holidays, New Year's, and summer business holidays will be provided on the next business day.

Contact by phone
Japanese/English
Miki Pulley International Business Department
TEL +81-46-257-5109